MICRO SWITCH
A DIVISION OF MINNEAPOLIS-HONEYWELL REGULATOR COMPANY
FREEPORT, ILLINOIS
FED. MFR. CODE 91929

SWITCH-BASIC

CATALOG LISTING
BA-2RV2-A2

BA-2RV2-A2 ISSUE 2

REPLACES

RELEASE NO.

M BA-2RV2-A2 PAGE 1 OF 1

DRAWING NUMBER

ISSUE 8

CHECK

REVISIONS

A	CO 15663	G C H 15 DEC 61
B	C034312	D B W 29 APR 75
C	CO-73287-J	J A L 22 NOV 93
D	CO-75204B	JWB 1 FEB 94
E	CO 775 90	S A D 8 JUN 94
F	C093346	D L T 26 AUG 98

CHECK

DAN 9 JAN '62

CHECK

15 DEC 61

DRAWN G C H

FORMTEK 0-50378

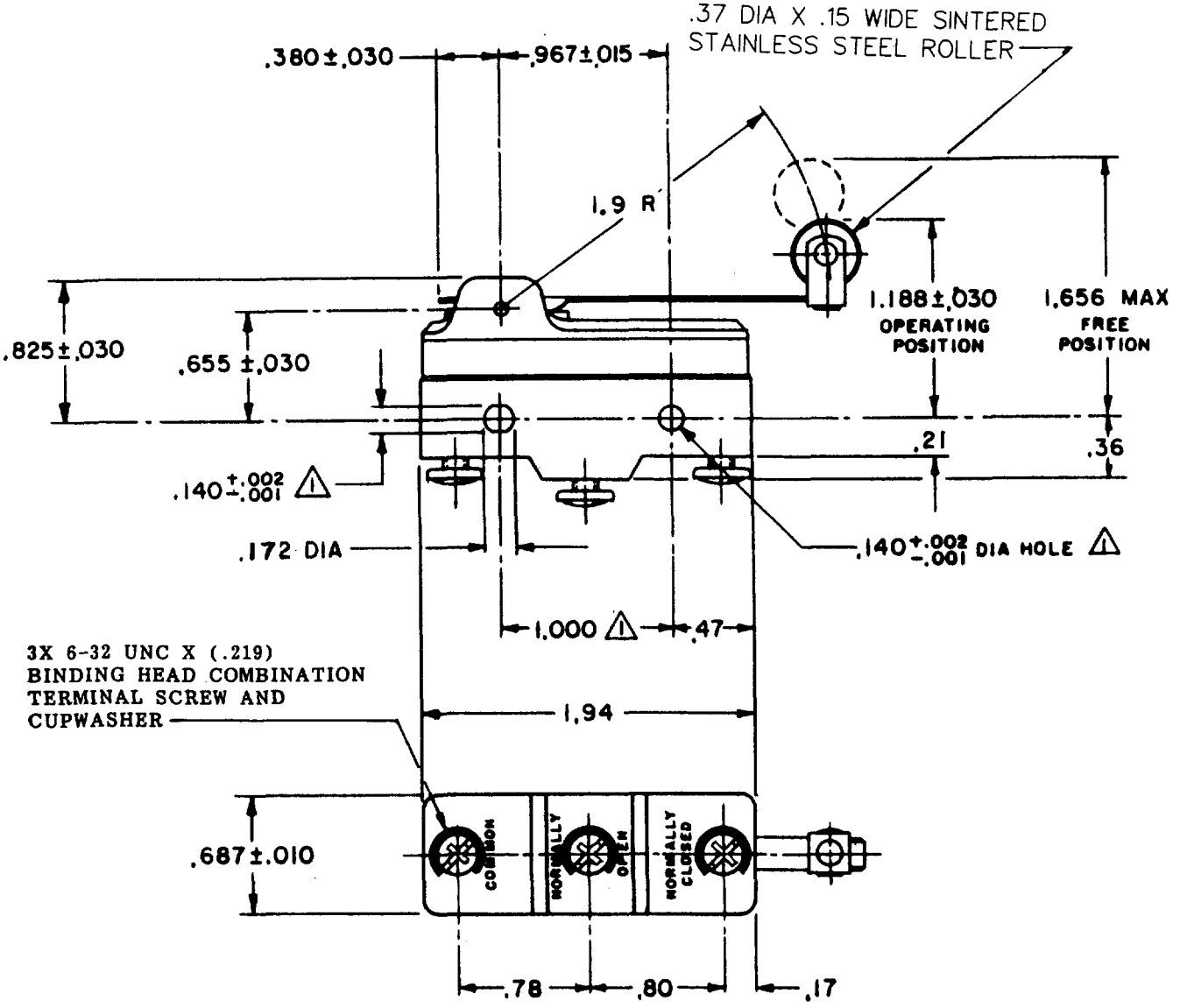

NOTE-
⚠ - MOUNTING HOLES WILL ACCEPT PINS OR SCREWS OF .139 MAX DIA ON 1.000±.002 CENTERS

THIS DRAWING COVERS A PROPRIETARY ITEM AND IS THE PROPERTY OF MICRO SWITCH, A DIVISION OF MINNEAPOLIS-HONEYWELL REGULATOR CO. THIS DRAWING IS NOT TO BE COPIED OR USED WITHOUT THE APPROVAL OF MICRO SWITCH.

CHARACTERISTICS

OPERATING FORCE ------ 3 1/2 OZ MAX

RELEASE FORCE -------- 1/2 OZ MIN

PRETRAVEL ---------- .468 MAX

DIFFERENTIAL TRAVEL ------ .085 MAX

OVERTRAVEL ---------- .060 MIN

ELECTRICAL DATA

CONTACT ARRANGEMENT
SPDT

L23
UNDERWRITERS' LAB. INC. LISTED RATING
20A - 125, 250 OR 480 VAC
10A - 125 VAC "L"
1HP - 125 VAC, 2HP - 250 VAC
1/2A - 125 VDC, 1/4A - 250 VDC

L288
L299
L308

CE D SA

20(3)A 250V ~ T85 5E4

SCALE --- FULL

DO NOT SCALE PRINT

UNLESS OTHERWISE SPECIFIED
DIMENSIONS ARE IN INCHES

TOLERANCES ARE:

ONE PLACE	(.0)	±.030
TWO PLACE	(.00)	±.015
THREE PLACE	(.000)	±.005
ANGLES		±

WEIGHT